AGENDA
BOARD OF TRUSTEES
TOWN OF WESTCLIFFE
MONDAY, OCTOBER 17, 2022
PATTERSON HALL – 1000 MAIN
REGULAR MEETING
5:30 p.m.

Join by Zoom
Meeting ID: 812 7671 0943
Passcode: 984350
By Phone: 253-215-8782

1. Call to Order
2. Pledge of Allegiance
3. Roll Call
4. Recognition of Visitors
5. **Consent Agenda**
   Note: All items listed under the Consent Agenda are routine and are approved with one motion. There will be no separate discussion of these items unless a Board Member or citizen requests. The item may be removed from the Consent Agenda and considered separately, at the discretion of the Board of Trustees.
   a. Approval of minutes
   b. Treasurer's Report
   c. Approval of Bills
6. Old Business
   None
7. New Business
   a. **PUBLIC HEARING** for a new Hotel-Restaurant liquor license at 108 S. 3rd, St., Suite A for Chuds, LLC dba Chuds Pizza and Burgers.
   b. Consideration of a request to approve a new Hotel-Restaurant liquor license at 108 S. 3rd, St., Suite A for Chuds, LLC dba Chuds Pizza and Burgers.
   c. Consideration of a request to approve an encroachment on the south side of Granada for a cluster of mailboxes.
   d. Consideration of a request to waive the building permit fee for the Wet Mtn. Fire Department.
   e. Round Mountain Water and Sewer update-David Schneider.
   f. Sheriff 3rd quarter report.
   g. Consideration of renewing three Certificates of Deposit with Kirkpatrick Bank.
   h. Consideration of appointing a committee to review the Custer County Town of Westcliffe and Silver Cliff Emergency Operations Plan.
   i. Consideration and discussion on fill for the pond at the Bluff.
   j. Executive Session for the purpose of a personnel matter under C.R.S. Section 24-6-402(2) (f)(I) to interview candidates for the Town Manager position.
8. Additions to Agenda
9. Staff & Committee Reports
10. Public Comment – The purpose is to request placing items on future agendas and scheduling informational presentations. There is a 3-minute limit for presentations.
    Adjourn

CALL TO ORDER

Mayor Wenke called the meeting to order at 1:00 P.M.

ROLL CALL

The following members were present: Mayor Wenke, Ms. Cole, Mr. Wilhelm, Mr. Mowry, Ms. Snow arrived at 1:10 and Mr. Nordyke arrived during the Executive Session.

ABSENT: Mr. Frickell

PLEDGE OF ALLEGIANCE

The Pledge of Allegiance was suspended.

OTHERS PRESENT

Clay Buchner and Kathy Reis

ORDER OF BUSINESS

a. **Presentation of the 2023 Proposed Budget (No discussion/No decisions)**

   Clerk Reis presented the 2023 Proposed Budget, there was no discussion or decisions.

b. **Schedule a budget workshop.**

   The budget workshop was scheduled for Monday, October 24th at 1:00 p.m.

c. **Appoint an interview committee and set an interview date for the Town Manager position.**

   ACTION: **Mr. Mowry** moved and **Ms. Snow** seconded to appoint Mayor Wenke, Ms. Snow, and Mr. Wilhelm as the interview committee. Motion carried.

   The interviews will be scheduled for Wednesday, Oct 12th at 2:00 p.m.

d. **Executive Session for the purpose of a personnel matter under C.R.S. Section 24-6-402(2) (f)(I) regarding bonuses.**

   ACTION: **Mr. Mowry** moved, and **Mr. Wilhelm** seconded to move into executive session for a personal matter allowed by C.R.S. Section 24-6-402(2) (f) (I) and not involving: any specific employees who have requested discussion of the matter in open session; any

ORDER OF BUSINESS CONTINUED

member of this body or any elected official; the appointment of any person to fill an office of this body or of an elected official; regarding the bonuses. Motion carried.

EXECUTIVE SESSION

At 1:16 p.m. the Special Meeting was recessed. Executive Session was convened at 1:17 p.m.

At 1:31 p.m., Mayor Wenke reconvened the special meeting and announced that the Executive Session had been concluded. He stated that in addition to himself, the participants in the Executive Session were Ms. Cole, Ms. Snow, Mr. Wilhelm, Mr. Mowry, Mr. Nordyke and Clay Buckner. For the record, Mayor Wenke asked that if any person participating in the Executive Session who believed that any substantial discussion of any matters not included in the motion to go into Executive session occurred during the Executive Session in violation of the Open Meetings Law, to state his or her concerns for the record.

ACTION: **Ms. Snow** moved and **Ms. Cole** seconded to approve the bonuses as discussed for Kathy Reis, Wanda Jennings and Neal Marrs. Motion carried.

Mr. Wilhelm moved and **Ms. Cole** seconded to adjourn. Motion carried.

ADJOURN

Recorded by:
Kathy Reis, CMC
Town Clerk

BOARD OF TRUSTEES
TOWN OF WESTCLIFFE
MONDAY, SEPTEMBER 19, 2022
REGULAR MEETING

CALL TO ORDER

Mayor Pro-Tem Cole called the meeting to order at 5:30 p.m.

ROLL CALL

The following members were present: Ms. Cole, Mr. Frickell, Ms. Snow, Mr. Nordyke, Mr. Wilhelm, and Mr. Mowry

ABSENT: Mayor Wenke

PLEDGE OF ALLEGIANCE

Mayor Pro-Tem Cole led the Pledge of Allegiance

OTHERS PRESENT

Daniel Stutzman, Joel Troyer, Charley Ellison, Susan Anders, Courtney Miller, Janet Rhodes, Marilyn Hennessy, Charles Jagow, Ron Dick, John Smith, Clay Buchner, Wanda Jennings, and Kathy Reis: Zoom-Elliot Jackson, Nathan Silberhorn and Craig Cutter.

TREASURER'S REPORT

REVENUE RECEIVED IN			BALANCE OF ACCOUNTS	
General Fund Checking:	$	106,702.57	$	949,707.72
CSafe-GF Core 11:	$	253.30	$	134,218.88
CSafe-3% Tabor Reserve:	$	66.54	$	35,206.52
CSafe-General Fund Reserve-14	$	306.92	$	162,655.46
Municipal Court Checking:	$	0.00	$	2,482.70
Tennis Court Checking:	$	0.00	$	25,178.70
Conservation Trust Fund Checking:	$	6.94	$	40,877.51
Capital Fund Checking:	$	97,299073	$	554,477.60
CSafe-CF Core 12:	$	417.62	$	221,302.08
Total C.D.'s plus interest:	$	154.23	$	203,968.17

EXPENDITURES FOR AUGUST 2022:

GENERAL FUND:	$	55,897.05
MUNICIPAL COURT:	$	0.00
TENNIS COURT:	$	0.00
CONSERVATION TRUST FUND:	$	0.00
CAPITAL FUND:	$	237,618.74

APPROVAL OF CONSENT AGENDA

a. Approval of minutes: Aug. 10th special, Aug. 15th regular, and Sept. 2nd special minutes
b. Treasurer's Report
c. Approval of Bills

Mr. Mowry moved and **Mr. Wilhelm** seconded to approve the consent agenda including minutes for three meetings. Motion carried.

OLD BUSINESS

a. **Consideration of approving Resolution 4-2022 changing 103 Ridgeline Drive from light equipment to heavy equipment use.**

It was reported that the final plumbing certificate has been received, we don't have the final on the electrical. Joel Troyer reported they are trying to resolve the electrical permit.

Attorney Buchner suggested that it could be approved with a contingency on getting the final permits.

ACTION: **Ms. Snow** moved and **Mr. Nordyke** seconded to approve Resolution 4-2022 changing 103 Ridgeline Drive from light equipment to heavy equipment use contingent upon obtaining the final Certificate of Occupancy final electrical and plumbing inspection. Motion carried.

b. **Consideration of accepting the Charge Ahead grant.**

Matt Mines with Colorado Energy Office explained the award was for two DC fast chargers, and a level two. These would be two charging stations capable of charging quite quickly and one that takes more time. There are incentives from Black Hills Energy of $20,000 per charging station. Rebates would be $35,000 from the Energy Office and from Black Hills per station for a total of $70,000 from the Energy Office and $40,000 from Black Hills. On the L2 we offer 80% up to $9,000, which Westcliffe were doing two L2's, Black Hills offers $3,000 per port. The Energy Office would be $18,000 and Black Hills would be $12,000.

The timeline to finish the project is flexible due to supply issues.

Clerk Reis asked if it works to start the project in the summer of 2023 to coordinate with another project being done. Matt Mines responded that it is possible.

Clerk Reis stated that she is not comfortable overseeing this project. After further discussion, the board agreed to put it on hold until we have the personnel to oversee the project and decide whether to proceed or not.

c. **Consideration of approving the Request for Proposal for Engineering Services.**

There was a draft for review. The Request for Proposals will be due by November 15th.

ACTION: **Ms. Snow** moved and **Mr. Mowry** seconded to approve of the Request for Proposal for Engineering Services. Motion carried.

NEW BUSINESS

a. **Consideration of a request to approve a Service Agreement between the Town and the Rotary Club of the Wet Mountain Valley to install benches on private property.**

Courtney Miller representing Rotary Club has requested a formal service agreement so that all parties understand what their responsibilities are. The Town's responsibility is for the installation and insurance, and the Rotary's Club's responsibility is to maintain the benches. There are two benches, one at 101 Main owned by Bob and Kathy Seei, and the second one at 511 Main owned by Sol Vista. The benches will be on private property. The benches are currently being stored at the Silver Cliff shop.

ACTION: **Mr. Mowry** moved and **Mr. Wilhelm** seconded to approve the Service Agreement between the Town and the Rotary Club of the Wet Mountain Valley to install benches on private property. Motion carried.

b. **Sheriff 3rd quarter report.**

The Under Sheriff was not in attendance, it will be rescheduled for the October meeting.

c. **Consideration of a request to waive the building permit for the Wet Mtn. Fire Department.**

There wasn't a representative from the Fire Department, it will be rescheduled for the October meeting.

d. **Discussion of the new street lights.**

There has been a concern from citizens regarding the brightness of the new street lights. For many, the lights are reaching into their homes, making it hard to sleep. The request is to have the lights to be shielded and lower the lumens, something needs to be changed.

Chuck Jagow, the current president of Dark Skies has also had complaints. The new lights are shielded, however, are extremely bright and very harsh. The Town provided the order sheet that detailed what the options were. Dark Skies had given the Town $5,000 towards the lights. Dark Skies was not contacted about reviewing the lights that were ordered. It appears that if it wasn't specified what you want, then you receive about a 5,000-kelvin light. The recommended kelvin is 2,700. These lights are not 2,700 kelvins.

NEW BUSINESS CONTINUED

Craig Cutter with Black Hills reported that according to the spec sheet, they are zero percentage up lights and are 3,000-kelvin lights. Three thousand and below are considered Dark Sky per the roadway lighting specs I have. The lights that were in there previously were high-pressure sodium lights, LED lights were requested. They are a white light. We can put you in touch with Scott Chanel, a lighting expert that Black Hills uses. There may be some options that can be done. We are willing to help resolve the situation.

The board asked if there was a remedy now. He will look into replacing the LED lights with the high-sodium lights if they still have them. He will have to talk to his supervisor Dan Witt.

After further discussion, and research on the lights have been done, a workshop will be scheduled to resolve this.

e. Update on design for the TAP project.

This discussion is regarding the roundabout that was proposed to help with drainage and snow removal as well as being used to put a Christmas tree in the middle.

Nathan Silberhorn (Ayers Associates, engineer for the TAP project)-stated they had only done some conceptual drawings and estimates for the roundabout. This is not in the base project; it is in the project just to reconstruct the T-intersection. It is just an option we looked at.

In terms of the cost impact, I don't think it would be significantly more. Currently, we are looking at a 1.7-to-2-million-dollar construction budget. The additional cost to build a roundabout might be between a hundred to hundred and fifty thousand dollars additional range. From a drainage perspective, it is similar to a T-intersection. The decision may really need to be, what is the context for Westcliffe, what kind of configuration do you want, and more importantly, how do you want to handle the existing gravel in the semi-circle pull-out that is at the park? The roundabout would pave that and make it part of the road, if we do the T-intersection, we would recommend you pave the semi-circle. With the T-intersection, it could be used as a temporary drop of and pick-up area.

South of the semi-circle area, the gravel widening that is parallel to the road, we are proposing to put concrete parking spots there with a sidewalk along where the rock border is. His strong preference for pedestrian safety would be that the sidewalk continues around that arc rock border. That leaves a strange area left with gravel, which leaves an unimproved surface that will drain toward the street. It would be better from a facilities perspective to pave that with asphalt but maintain the shape. It wouldn't be part of the travel lane; it would be a pull-off. The other issue is, that part

NEW BUSINESS CONTINUED

is on the park property, it will require cooperation and at minimum an agreement. CDOT prefers to have a temporary construction permit or possibly a right-of-way acquisition.

Some citizens have concerns about the roundabout and object to it being put in. It was suggested to put a three-way stop there. The public works employees also have concerns about this making snow removal harder and are not in favor of it. There is also a concern about the delivery trucks accessing the businesses.

After more discussion due to the concerns, the board was not in favor of putting the roundabout in that intersection. The design can continue.

f. PUBLIC HEARING amending the 2022 budget.

There was no public comment.

g. Consideration of a request to approve Resolution 5-2022 amending the 2022 budget.

ACTION: **Mr. Wilhelm** moved and **Mr. Nordyke** seconded to approve Resolution 5-2022 amending the 2022 budget. Motion carried.

h. Consideration of a request to approve the 2023 contract with the Humane Society of Fremont County.

ACTION: **Mr. Frickell** moved and **Mr. Mowry** seconded to approve the 2023 contract with the Humane Society of Fremont County to include a ten-dollar increase. Motion carried.

i. Consideration of request of approving the 2023 CEBT renewal for employee health insurance.

ACTION: **Mr. Wilhelm** moved and **Ms. Snow** seconded to approve the 2023 CEBT renewal for employee health insurance. Motion carried

j. Review the 2023 CIRSA Property/Casualty Preliminary Quote.

ACTION: **Mr. Mowry** moved and **Mr. Wilhelm** seconded to accept the 2023 CIRSA Property/Casualty Preliminary Quote. Motion carried

NEW BUSINESS CONTINUED

k. Update on the Safe Routes to School project and overages.

Clerk Reis reported she had polled the Board of Trustees regarding the overages.

One was for 128' of curb and gutter that wasn't on the plans by design, after meeting with the engineer, the decision was to add it along with cutouts for drainage.

Currently, the project has overages of $60,859.40:
Westcliffe's-$51,123.40
Silver Cliff's-$9,736.00
There is will be one more for Westcliffe for the two flashing pedestrian signs; the only overage for that will be the cost of poles, base, and installation. The cost of the signs was included in the approved funding.

When the two Towns applied for the grant, the budget was set up separately ensuring that work done in Silver Cliff and Westcliffe would be paid for accordingly. The match for the construction was twenty-five thousand for each town.

STAFF & COMMITTEE REPORTS

a. Report from Town Clerk

Municode contract-The 2022 fee will remain at $2,200 for the conversion and the yearly fee, this includes the conversion for Title 10.

Donation grants-The Senior Center, Altitude Fitness, Garden Club, and the Wet Mtn. Valley Community Service (Rotary) all are over the $1,500 request amount. Normally the board asked them to be available at a workshop for a presentation. The board directed the clerk to invite them to the budget workshop.

Façade Grant update-Three out of the seven that applied have been completed, the remaining are in progress. There will be an amount remaining at the end of the year.

Pond-It is in the process of being drained and filled.

Ms. Snow moved and **Mr. Nordyke** seconded to adjourn. Motion carried.

ADJOURN

Recorded by:
Kathy Reis, CMC
Town Clerk

Treasurer's Report October 17, 2020

REVENUES RECEIVED IN SEPTEMBER 2022

GENERAL FUND

Cash			
Pastor Steve Holcomb (Lisa Frank)	Park Damage and Rental Fee		125.00
Amanda Deser	Fence Permit/109 N Adams		100.00
Checks			
Daniel Launtenberg	Bldg. Permit/302 S 2nd/New roof		240.00
Donna Hood	Bldg. Permit/306 S. 5th St/Garage addition		1,670.00
Ross Penkoff Construction, Inc.	Bldg. Permit/102 Yucca/New Residential		3,996.00
All Aboard Westcliffe	STR License Permit		200.00
Wet Mtn. Storage	Sign Permit/300 Main Street		150.00
Cathy Snow	Bldg Permit/103 Main/Window Installation		230.00
CIRSA	Reimb/Hotel/Manager Education		106.00
State of Colorado	Mineral Lease Distribution		83.73
State of Colorado	Severance Tax Distribution		132.69
Texas Creek Foam, LLC	Bldg Permit/250 Pyrite Circle/New Residential		3,600.00
Valley Ace Hardware	Park Damage and Usage Fee		125.00
Black Hills	Franchise Fee		2,474.96
Chuds, LLC	New Liquor License application		1,125.00
Custer County Church of Christ	Sign Permit/57900 Hwy 69S		25.00
Lea Lane Park	Excavation Permit/27 Lea Lane/Water Line		200.00
Jenny Young	Sign Permit/114 N 2nd Street		25.00
Custer County School	Street Closure Deposit		250.00
Lynda Marble	Bldg Permit #10 Lea Lane Remodel		908.00
All Solar, Inc	Bldg Permit/101 Hermit Lane/Solar		1,177.00
Custer County Treasurer			2,734.55
	INC-Current Interest	58.77	
	RBC-Road & Bridge	420.82	
	RLC-Current Tax	1,469.79	
	SOA-Specific Ownership Tax-A	130.08	
	SOB-Specific Ownership Tax-B	685.67	
	Treasurers Fee	-30.58	
United Business Bank	Interest		158.05
State of Colorado	Cigarette Tax		367.92
State of Colorado	2% Sales Tax		88,247.65
State of Colorado	Highway Users Tax		2,432.13
GENERAL FUND CHECKING REVENUE RECEIVED IN SEPTEMBER 2022			**$110,883.68**

CSafe-GF Core-11	Interest	360.94
CSafe-3% Tabor Reserve	Interest	78.62
CSafe-GF Reserve-14	Interest	401.08

TENNIS COURT PROJECT CHECKING

		0.00
TENNIS COURT PROJECT CHECKING REVENUE RECEIVED IN SEPTEMBER 2022		**$0.00**

		0.00
MUNICIPAL COURT CHECKING REVENUE RECEIVED IN SEPTEMBER 2022		**$0.00**

REVENUES RECEIVED IN SEPTEMBER 2022

CONSERVATION TRUST FUND

United Business Bank	Interest	6.85
State of Colorado	3rd Qtr. State Lottery	1,277.85
CONSERVATION TRUST FUND REVENUE RECEIVED IN SEPTEMBER 2022		**$1,284.70**

CAPITAL FUND

State of Colorado	TAP Project-Reimb. Inv# 9	7,688.00
State of Colorado	SRTS-Reimb.-Inv# 1	357,354.99
United Business Bank	Interest Capital Fund Checking	88.04
State of Colorado (Town of Westcliffe)	1 % Sales Tax	44,123.83
Town of Silver Cliff	SRTS Cash Match-Silver Cliff portion Construction Inv#1	11,001.37
Verizon Wireless	Lease Payment	1,000.00
CAPITAL FUND CHECKING REVENUE RECEIVED IN SEPTEMBER 2022		**$421,256.23**

Kirkpatrick Bank	Interest Certificates of Deposit	0.00
CSafe-CF Core 12	Interest	480.38

BALANCE IN ALL FUND ACCOUNTS

GENERAL FUND CHECKING	$522,757.59
CSafe-GF Core-11	$425,315.82
CSafe-3% Tabor Reserve	$44,099.14
CSafe-GF Reserve-14	$363,506.54
TENNIS COURT PROJECT CHECKING	$25,178.70
MUNICIPAL COURT CHECKING	$2,282.70
TOTAL GENERAL FUND ACCOUNTS	**$1,383,140.49**

CONSERVATION TRUST FUND CHECKING	$42,162.21
TOTAL CONSERVATION TRUST FUND ACCOUNTS	**$42,162.21**

CAPITAL FUND CHECKING	$594,229.85
CSafe-CF Core 12	$221,782.46
CERTIFICATES OF DEPOSIT PLUS INTEREST	$203,968.17
TOTAL ALL CAPITAL FUND ACCOUNTS	**$1,019,980.48**

CASH BALANCE OF ALL FUND ACCOUNTS **$2,445,283.18**

NOTE: 1% Sales tax of $44,123.83 was transferred to the Capital Fund from the General Fund.
NOTE: $200,450.00 was transferred from the General Fund checking to CSafe General Fund Reserve
NOTE: $290,736.00 was transferred from the General Fund checking to CSafe General Fund Core
NOTE: $8,814.00 was transferred from the General Fund checking to CSafe 3% Tabor Reserve

October 2022 Bills

GENERAL FUND

Airgas	Shop Maint./Welding Equipment	1,564.55
Black Hills Energy	Lights/Electric	1,614.30
Buchner, Clayton, Attorney at Law	Attorney Fees	2,082.00
Card Services	Off site backup/Phone/Misc.	527.68
CenturyLink	Phone/Elevator	49.57
Civicplus, LLC	Self Publishing Conversion Package	1,000.00
Custer County Rd. & Bridge	Street Maint./Fuel	589.01
Custer County Landfill	Extra Dump	48.00
Custer County Sheriff	4th quarter Sheriff Contract	14,125.00
Denver Industrial Sales & Service CO.	Street Maint./Cold patch	1,786.40
4Rivers	Equipment Maint.	2,358.51
Heuss, Mike	Reimburse/Clothing Allowance	914.24
Hilltop Broadband	Town Hall & Shop/Internet	255.45
Johns, Dwight	Reimburse Milieage	17.94
Lighthouse Pregnancy Center	Refund Park Damage Deposit & Usage fee (canceled)	125.00
Lipka, Desiree	Refund Park Damage Deposit	100.00
Lowe's Pay and Save, Inc.	Supplies	6.98
Marrs, Neal	Reimburse/Clothing Allowance	42.31
Oak Disposal Services	Street Maint./Trash Service	150.00
Pastor Steve Holcomb	Refund Park Damage Deposit	100.00
Pueblo Bearing	Vehicle Maint./Parts	50.12
Round Mtn. Water & Sanitation District	Water & Sewer	1,209.30
Sangres Art Guild	Refund Park & Bluff Damage Deposit	400.00
Sangre de Cristo Fellowship	Refund Street Closure Damage Deposit	100.00
Seifert Enterpirses, LLC	Park Maint./Drain Bluff Pond	1,680.00
Taylor, Gary (KLRZ)	Refund Street Closure Damage Deposit	250.00
The Rock Auto Parts	Vehicle Maint.	500.11
The Mountain Mail	Engineer Ad	30.90
The Valley Beat	Publication/Ad	120.00
Uline	Supplies	693.66
Valley Ace Hardware	Supplies	426.14
Westcliffe Farmers Market	Refund Park Damage Deposit	100.00
Western Irrigation Supply House	Park Maint./Parts	351.67
Wet Mtn Tribune	Publishing	957.20
Wet Mtn. Valley Community Service, Inc.	2022 Donation	976.92
Wolf, Robert	Refund Park Damage Deposit	100.00
Xerox Corporation	Meter Read/Lease Payment	155.81

Payroll Expenses

CEBT	Employer/Health Ins.	1,040.16
CEBT	Employee/Health Ins.	127.80
Colo. Department of Revenue	3rd qtr SWT	2,786.00
Colo. State Treasurer/EFT Payment	3rd qtr SUTA	148.27
EFTPS	September Payroll Taxes	4,952.80
GWRS	Employee Share Retirement Fund (ACH)	1,036.06
GWRS	Employer Share Retirement Fund (ACH)	319.75

BILLS TO DATE	**$45,969.61**
SEPTEMBER 2022 PAYROLL	$16,465.95
TOTAL GENERAL FUND EXPENDITURES FOR SEPTEMBER PAID IN OCTOBER 2022	**$62,435.56**

October 2022 Bills

CAPITAL FUND

Ayers Associates, Inc.	Tap Project-Progress Payment/Design	1,215.50
Deer Credit, Inc.	Lease Payment	930.74
Langston Concrete, LLC	SRTS Progress Payment #1	379,357.74
Langston Concrete, LLC	Curb ramp @ 401 Main St.	1,000.00
Town of Silver Cliff	Refund overpayment on Design SRTS	$1,800.61
TOTAL CAPITAL FUND EXPENDITURES FOR SEPTEMBER PAID IN OCTOBER 2022		**$384,304.59**

2:35 PM
10/03/22
Accrual Basis

TOWN OF WESTCLIFFE
Capital Fund Profit & Loss Budget Performance
September 2022

	Sep 22	Budget	Jan - Sep 22	YTD Budget	Annual Budget
Income					
CRF7160 · Interest Income	568.42	250.00	2,948.03	2,250.00	3,000.00
CRF7212 · Grant (New Town Property)	0.00		12,500.00		
CRF7220 · Grants (New) RW	357,354.99	18,912.58	357,354.99	170,213.26	226,951.00
CRF7224 · Grants (Existing) Town Pro	7,688.00	45,326.08	176,801.58	407,934.76	543,913.00
CRF7238 · Other Contributions	11,001.37	2,765.00	21,535.21	24,885.00	33,180.00
CRF7270 · Lease Proceeds Verizon Tower	1,000.00	1,000.00	9,000.00	9,000.00	12,000.00
CRF7280 · Capital Lease Proceeds	0.00	4,151.75	0.00	37,365.75	49,821.00
CRF7285 · 1% Sales Tax from General Fund	44,123.83	32,013.58	298,607.00	288,122.26	384,163.00
CRF7805 · Grants (Existing) Town Property	0.00	416.67	0.00	3,749.99	5,000.00
CRF7810 · Transfers From General Fund	0.00	10,000.00	0.00	90,000.00	120,000.00
Total Income	421,736.61	114,835.66	878,746.81	1,033,521.02	1,378,028.00
Expense					
CRF9011 · CIP Roadway (Existing)	0.00	36,666.67	229,000.00	329,999.99	440,000.00
CRF9012 · CIP Town Property (Existing)	0.00	2,541.67	36,361.50	22,874.99	30,500.00
CRF9014 · Equipment Debt Service	930.74	930.75	7,445.92	8,376.75	11,169.00
CRF9025 · CIP Roadway (New)	379,357.74	40,490.08	379,357.74	364,410.76	485,881.00
CRF9026 · CIP-Town Property (New)	0.00	15,708.33	0.00	141,375.01	188,500.00
CRF9027 · CIP-Equipment (New)	0.00	125.00	1,530.07	1,125.00	1,500.00
CRF9101 · Improvements-Design	1,215.50	12,397.08	170,885.25	111,573.76	148,765.00
Total Expense	381,503.98	108,859.58	824,580.48	979,736.26	1,306,315.00
Net Income	**40,232.63**	**5,976.08**	**54,166.33**	**53,784.76**	**71,713.00**

Town of Westcliffe
General Fund Profit & Loss Budget Performance
September 2022

	Sep 22	Budget	Jan - Sep 22	YTD Budget	Annual Budget
Income					
7000 · General Property Taxes	1,469.79	5,532.58	64,874.55	49,793.26	66,391.00
7050 · Specific Ownership Taxes	815.75	741.67	6,280.52	6,674.99	8,900.00
7100 · Town Sales Taxes	88,247.65	65,892.32	597,214.50	593,030.92	790,707.88
7101 · Town Sales Tax License	200.00	265.83	6,270.00	2,392.51	3,190.00
7106 · Penalities & Int-Delinquent Tax	58.77	25.00	200.63	225.00	300.00
7115 · Franchise Fee	2,474.96	2,166.67	25,387.06	19,499.99	26,000.00
7120 · Special Assesments	0.00	140.25	341.90	1,262.25	1,683.00
7125 · Building & Zoning Permits	12,021.00	2,083.33	108,297.50	18,750.01	25,000.00
7126 · Fence & Sign Permits	200.00	200.00	1,625.00	1,800.00	2,400.00
7127 · Special Use By Review Permits	0.00	125.00	1,250.00	1,125.00	1,500.00
7130 · Traffic Fines & Ordinances	0.00	12.50	1,075.67	112.50	150.00
7135 · Court Costs	0.00	2.08	0.00	18.76	25.00
7140 · Liquor Licenses/Special Events	1,125.00	125.00	4,151.45	1,125.00	1,500.00
7150 · Cigarette Tax	367.92	150.00	1,561.55	1,350.00	1,800.00
7160 · Interest Income	998.69	83.33	3,877.49	750.01	1,000.00
7165 · Miscellaneous Income	696.00	50.00	2,563.29	450.00	600.00
7200 · Highway Users Tax	2,432.13	2,433.25	19,920.16	21,899.25	29,199.00
7205 · Road & Bridge Funds	420.82	2,579.60	31,617.60	23,216.41	30,955.21
7215 · American Rescue Plan Funds	-78,923.83	6,576.99	0.00	59,192.85	78,923.82
7300 · Tennis Court Donation Fund	0.00	4.17	143.36	37.49	50.00
7305 · Events Center-Rental Fees	0.00	179.17	3,100.00	1,612.49	2,150.00
7310 · Bluff Site Maint. Fee	0.00	283.33	0.00	2,550.01	3,400.00
7315 · Park Usage Fee	50.00	100.00	1,625.00	900.00	1,200.00
7840 · State Grant	0.00	25.00	0.00	225.00	300.00
7845 · Federal Grant	216.42	9.58	216.42	86.26	115.00
Total Income	32,871.07	89,786.65	881,593.65	808,079.96	1,077,439.91
Gross Profit	32,871.07	89,786.65	881,593.65	808,079.96	1,077,439.91
Expense					
8000 · Trustees	325.10	416.67	3,677.68	3,749.99	5,000.00
8005 · Ordinances & Procedures	553.96	333.33	2,592.87	3,000.01	4,000.00
8010 · Colo. Muni League Dues	0.00	71.25	855.00	641.25	855.00
8015 · Elections	0.00	191.67	145.08	1,724.99	2,300.00
8020 · General Accounting	90.00	100.00	1,172.98	900.00	1,200.00
8025 · Auditing	0.00	491.67	6,100.00	4,424.99	5,900.00
8030 · Attorney	2,310.00	1,666.67	10,312.50	14,999.99	20,000.00
8035 · Insurance - General	0.00	665.42	8,021.64	5,988.74	7,985.00
8040 · Workman's Compensation	0.00	566.67	5,929.00	5,099.99	6,800.00
8050 · Colorado State Unemployment	15.95	63.81	292.45	574.27	765.70
8100 · Town's Share FICA	1,300.71	1,318.71	12,337.29	11,868.34	15,824.47
8110 · Town's Share MEDI	304.19	308.41	2,885.33	2,775.65	3,700.88
8115 · Town Share Health Insurance	2,286.54	2,830.07	17,700.14	25,470.59	33,960.80
8120 · Town Share Retirement Fund	1,029.74	507.92	3,791.47	4,571.26	6,095.02
8200 · Clerk/Treasurer Wages	3,954.86	3,954.86	35,593.74	35,593.74	47,458.32
8205 · Deputy Clerk	3,043.26	3,120.00	27,993.96	28,080.00	37,440.00
8208 · Media Relations Coordinator	0.00	1,235.00	862.06	11,115.00	14,820.00
8210 · Clerk Education	50.00	100.00	115.00	900.00	1,200.00
8215 · Office Supplies	311.54	125.00	1,182.89	1,125.00	1,500.00
8220 · Town Manager Wages	0.00	5,476.67	49,997.86	49,289.99	65,720.00
8225 · Manager/Bldg/Zoning Education	116.65	183.33	2,390.67	1,650.01	2,200.00
8235 · Building Inspector	3,524.66	270.83	3,524.66	2,437.51	3,250.00
8240 · County Treasurer's Fees	30.58	200.00	1,301.35	1,800.00	2,400.00
8280 · Payroll Expenses	0.00		588.00		
8300 · Town Hall Maintenance	200.70	500.00	4,111.30	4,500.00	6,000.00
8308 · Town Hall Utilities	473.53	591.67	5,656.04	5,324.99	7,100.00
8310 · Lease Equipment	120.50	125.42	964.00	1,128.74	1,505.00

Town of Westcliffe
General Fund Profit & Loss Budget Performance
September 2022

	Sep 22	Budget	Jan - Sep 22	YTD Budget	Annual Budget
8405 · Animal Control	0.00	158.58	302.67	1,427.26	1,903.00
8410 · Organizational Membership Dues	0.00	74.08	130.00	666.76	889.00
8505 · Townman Education	0.00	250.00	0.00	2,250.00	3,000.00
8510 · Street and Park Tech Wages	10,584.15	11,122.08	81,471.86	100,098.76	133,465.00
8515 · Street Maintenance & Fuel	1,509.43	3,750.00	26,656.00	33,750.00	45,000.00
8520 · Emergency Snow Removal	0.00	2,500.00	9,576.00	22,500.00	30,000.00
8525 · Street Lighting	1,226.30	1,000.00	8,969.68	9,000.00	12,000.00
8530 · Vehicle & Equip. Maintenance	237.51	1,666.67	12,267.20	14,999.99	20,000.00
8538 · Shop Maintenance	838.39	833.33	5,200.19	7,500.01	10,000.00
8540 · Shop Utilities	169.53	425.00	2,999.18	3,825.00	5,100.00
8545 · Highway Barn Utilities	83.88	383.33	3,297.46	3,450.01	4,600.00
8550 · Highway Barn Maint.	0.00	416.67	0.00	3,749.99	5,000.00
8600 · Park Utilities	2,868.95	2,125.00	9,369.60	19,125.00	25,500.00
8605 · Park Maintanence	0.00	1,333.33	16,848.99	12,000.01	16,000.00
8700 · Custer County Sheriff	0.00	4,802.50	42,375.00	43,222.50	57,630.00
8800 · Donations	1,243.01	2,333.33	15,295.72	21,000.01	28,000.00
8805 · Grants/Local	0.00	2,083.33	10,020.18	18,750.01	25,000.00
8806 · American Rescue Plan Expenses	0.00	13,153.97	0.00	118,385.73	157,847.64
8808 · Economic Development	0.00	1,083.33	0.00	9,750.01	13,000.00
8810 · Contingencies	0.00	1,250.00	0.00	11,250.00	15,000.00
8811 · Contribution to/fromCapital Fun	0.00	10,000.00	0.00	90,000.00	120,000.00
Total Expense	38,803.62	86,159.58	454,874.69	775,436.09	1,033,914.83
Net Income	**-5,932.55**	**3,627.07**	**426,718.96**	**32,643.87**	**43,525.08**

2022 SALES TAX & PRIOR YEARS COMPARISONS

	2017	2018	2019	2020	2021	2022	2022	2022	% +/-
					3% total	2% of total (General Fund)	1% of total (Capital Fund)	3% Total Sales Tax	
JAN	18,861.17	25,564.67	30,006.18	34,234.63	69,693.17	52,130.67	26,065.34	78,196.01	12.20%
	50.27				150.80				
FEB	24,659.13	19,628.62	24,163.25	32,835.27	62,025.70	47,263.31	23,631.66	70,894.97	14.30%
	3.87				232.01				
MAR	26,843.98	29,456.57	36,077.93	51,033.37	88,768.43	62,836.37	31,418.18	94,254.55	6.18%
	245.19				15.95				
APR	30,763.20	26,907.00	31,062.04	46,184.28	77,315.01	63,620.32	31,810.16	95,430.48	23.43%
	0.02								
MAY	31,184.50	37,867.12	43,414.62	51,540.56	101,149.31	65,844.72	32,921.39	98,764.18	-2.36%
	185.6								
JUNE	40,835.96	45,084.65	56,385.66	69,361.40	121,572.25	87,594.31	43,797.16	131,391.47	8.08%
	83.13								
				2% of total (General Fund)					% +/-
JULY	43,306.02	43,950.00	56,461.48	65,272.29	117,054.99	88,247.65	44,123.83	132,371.48	13.08%
					130.50				
AUG.	38,829.14	35,968.42	46,583.57	59,524.79	88,928.52				
SEPT.	39,333.39	36,753.56	58,818.79	79,591.87	118,962.80				
OCT.	29,105.54	43,911.98	46,241.58	58,001.14	99,222.56				
	65.73			74.43					
NOV.	31,259.25	29,329.94	44,692.15	52,631.93	92,901.48				
	491.05			44.47	7.25				
DEC.	31,209.51	32,424.95	45,023.69	66,270.58	101,609.63				
1% Capital Fund									
TOTAL	356,049.01	406,847.48	473,907.25	547,579.60	637,977.62	467,537.36	233,767.71	701,303.14	9.93%

Proposed	340,000.00	360,000.00	518,930.94	510,000.00	898,561.65	790,707.88	384,163.00
Actual	387,315.65	406,847.48	473,907.25	547,579.60	1,139,740.36	467,537.36	233,767.71
Difference	47,315.65	46,847.48	45,023.69	-37,579.60	-241,178.71	323,170.52	150,395.29

Town of WESTCLIFFE est. 1887

Memorandum

TO: **Liquor Authority Board**

FROM: **Kathy Reis, Town Clerk, CMC**

DATE: **October 17, 2022**

SUBJECT: **Colorado Liquor License Application for a New Hotel & Restaurant License for Chuds, LLC., dba Chuds Pizza and Burgers 108 S. 2nd, St., Suite A Westcliffe, CO 81252**

ISSUE:

A Colorado Liquor License Application for a new Hotel & Restaurant for Chuds LLC., dba Chuds Pizza and Burgers has been filed with the Town Clerk's Office.

Based on the information contained in Exhibits 1 - 3 that will be entered into the record of the hearing, the Town Clerk's Office presents the following initial findings:

1. The Notice of Public Hearing to be Held by the Liquor Authority concerning the subject application was published in the Wet Mtn. Tribune on September 29, 2022. The premises were posted on September 15, 2022. The Notice of Public Hearing was provided in the manner required by law.
2. The proper fees have been remitted to the Town of Westcliffe.
3. The applicant is in legal possession of the property by virtue of a Commercial lease dated September 12, 2022.
4. The property is in compliance with the zoning ordinances, rules, and regulations of the Town.
5. The Managing Member of the LLC is Mr. Edward Aulich.
6. There was (a misdemeanor for harassment) with a deferred sentence reported by one of the applicants on the Individual History Record.

- EXHIBIT 1

  Correctly completed application DR 8404

- EXHIBIT 2

  Diagram of License Premises

- EXHIBIT 3

  Evidence of proper posting of the premises

RECOMMENDATION:

Staff recommends approval of the Liquor License.

MOTIONS:

"I move to approve the issuance of a new Hotel & Restaurant License for Chuds, LLC., dba Chuds Pizza and Burgers located at 108 S. 3rd St., Suite A, Westcliffe, CO. 81252 on the basis of the following findings:

1. Public Notice of the hearing on the Application was published and posted on the property as required by Colorado law;
2. The applicant is qualified to obtain a liquor license pursuant to C.R.S. Section 44-3-307;
3. The premises are in a location eligible to conduct the proposed liquor licensed business pursuant to C.R.S. Section 44-3-313 and the zoning laws of the Town;
4. The applicant is entitled to possession of the premises for which the application is made;

Or

"I move to deny the application for new Hotel & Restaurant License for Chuds, LLC., dba Chuds Pizza and Burgers located at 108 S. 3rd St., Suite A, Westcliffe, CO. 81252 for the following reasons: _____."

DR 8404 (12/29/21)
COLORADO DEPARTMENT OF REVENUE
Liquor Enforcement Division
(303) 205-2300

Colorado Liquor
Retail License Application

☑ New License ☐ New-Concurrent ☐ Transfer of Ownership ☐ State Property Only ☐ Master file

- All answers must be printed in black ink or typewritten
- Applicant must check the appropriate box(es)
- Applicant should obtain a copy of the Colorado Liquor and Beer Code: *SBG.Colorado.gov/Liquor*

1. Applicant is applying as a/an ☐ Individual ☑ Limited Liability Company ☐ Association or Other ☐ Corporation ☐ Partnership (includes Limited Liability and Husband and Wife Partnerships)

2. Applicant If an LLC, name of LLC; if partnership, at least 2 partner's names; if corporation, name of corporation: CHUDS LLC
FEIN Number: [redacted]

2a. Trade Name of Establishment (DBA): CHUDS PIZZA AND BURGER
State Sales Tax Number: 94567850
Business Telephone: 815-382-1331

3. Address of Premises (specify exact location of premises/include suite/unit numbers): 108 S 2nd ST UNIT A
City: Westcliffe
County: CUSTER
State: CO
ZIP Code: 81252

4. Mailing Address (Number and Street): P.O. BOX 1053
City or Town: Westcliffe
State: CO
ZIP Code: 81252

5. Email Address: eandmaulish@outlook.com

6. If the premises currently has a liquor or beer license, you must answer the following questions

Present Trade Name of Establishment (DBA)	Present State License Number	Present Class of License	Present Expiration Date
N/A	N/A	N/A	N/A

Section A — Nonrefundable Application Fees*

- ☑ Application Fee for New License $1,100.00
- ☐ Application Fee for New License w/Concurrent Review $1,200.00
- ☐ Application Fee for Transfer $1,100.00

Section B — Liquor License Fees*

- ☐ Add Optional Premises to H & R ..... $100.00 X _____ Total _____
- ☐ Add Related Facility to Resort Complex $75.00 X _____ Total _____
- ☐ Add Sidewalk Service Area $75.00
- ☐ Arts License (City) $308.75
- ☑ Arts License (County) $308.75
- Beer and Wine License (City) $351.25
- ☐ Beer and Wine License (County) $436.25
- ☐ Brew Pub License (City) $750.00
- ☐ Brew Pub License (County) $750.00
- ☐ Campus Liquor Complex (City) $500.00
- ☐ Campus Liquor Complex (County) $500.00
- ☐ Campus Liquor Complex (State) $500.00
- ☐ Club License (City) $308.75
- ☐ Club License (County) $308.75
- ☐ Distillery Pub License (City) $750.00
- ☐ Distillery Pub License (County) $750.00
- ☑ Hotel and Restaurant License (City) $500.00
- ☐ Hotel and Restaurant License (County) $500.00
- ☐ Hotel and Restaurant License w/one opt premises (City) $600.00
- ☐ Hotel and Restaurant License w/one opt premises (County) $600.00
- ☐ Liquor–Licensed Drugstore (City) $227.50

Section B (Cont.) — Liquor License Fees*

- ☐ Liquor–Licensed Drugstore (County) $312.50
- ☐ Lodging & Entertainment - L&E (City) $500.00
- ☐ Lodging & Entertainment - L&E (County) $500.00
- ☐ Manager Registration - H & R $75.00
- ☐ Manager Registration - Tavern $75.00
- ☐ Manager Registration - Lodging & Entertainment $75.00
- ☐ Manager Registration - Campus Liquor Complex $75.00
- ☐ Optional Premises License (City) $500.00
- ☐ Optional Premises License (County) $500.00
- ☐ Racetrack License (City) $500.00
- ☐ Racetrack License (County) $500.00
- ☐ Resort Complex License (City) $500.00
- ☐ Resort Complex License (County) $500.00
- ☐ Related Facility - Campus Liquor Complex (City) $160.00
- ☐ Related Facility - Campus Liquor Complex (County) $160.00
- ☐ Related Facility - Campus Liquor Complex (State) $160.00
- ☐ Retail Gaming Tavern License (City) $500.00
- ☐ Retail Gaming Tavern License (County) $500.00
- ☐ Retail Liquor Store License--Additional (City) $227.50
- ☐ Retail Liquor Store License–Additional (County) $312.50
- ☐ Retail Liquor Store (City) $227.50
- ☐ Retail Liquor Store (County) $312.50
- ☐ Tavern License (City) $500.00
- ☐ Tavern License (County) $500.00
- ☐ Vintners Restaurant License (City) $750.00
- ☐ Vintners Restaurant License (County) $750.00

*** Note that the Division will not accept cash**

Questions? Visit: *SBG.Colorado.gov/Liquor* **for more information**

Do not write in this space - For Department of Revenue use only

Liability Information

License Account Number	Liability Date	License Issued Through (Expiration Date)	Total
			$

DR 8404 (12/29/21)

Application Documents Checklist and Worksheet

Instructions: This checklist should be utilized to assist applicants with filing all required documents for licensure. All documents must be properly signed and correspond with the name of the applicant exactly. All documents must be typed or legibly printed. Upon final State approval the license will be mailed to the local licensing authority. Application fees are nonrefundable. **Questions? Visit:** *SBG.Colorado.gov/Liquor* **for more information**

Items submitted, please check all appropriate boxes completed or documents submitted

I. Applicant information

- ☑ A. Applicant/Licensee identified
- ☑ B. State sales tax license number listed or applied for at time of application
- ☑ C. License type or other transaction identified
- ☑ D. Return originals to local authority (additional items may be required by the local licensing authority)
- ☑ E. All sections of the application need to be completed
- N/A F. Master file applicants must include the Application for Master File form DR 8415 and applicable fees to this Retail License Application

II. Diagram of the premises

- ☑ A. No larger than 8 1/2" X 11"
- ☑ B. Dimensions included (does not have to be to scale). Exterior areas should show type of control (fences, walls, entry/exit points, etc.)
- ☐ C. Separate diagram for each floor (if multiple levels)
- ☐ D. Kitchen - identified if Hotel and Restaurant
- ☐ E. Bold/Outlined Licensed Premises

III. Proof of property possession (One Year Needed)

- ☐ A. Deed in name of the applicant (or) (matching question #2) date stamped / filed with County Clerk
- ☑ B. Lease in the name of the applicant (or) (matching question #2)
- ☐ C. Lease assignment in the name of the applicant with proper consent from the landlord and acceptance by the applicant
- ☐ D. Other agreement if not deed or lease. (matching question #2)

IV. Background information (DR 8404-I) and financial documents

- ☑ A. Complete DR 8404-I for each principal (individuals with more than 10% ownership, officers, directors, partners, members)
- ☑ B. Fingerprints taken and submitted to the appropriate Local Licensing Authority through an approved state vendor. **Do not complete fingerprint cards prior to submitting your application.**
  The Vendors are as follows:
  IdentoGO – *https://uenroll.identogo.com/* Phone: 844-539-5539 (toll-free)
  Colorado Fingerprinting – *http://www.coloradofingerprinting.com*
  Appointment Scheduling Website: *http://www.coloradofingerprinting.com/cabs/*
  Phone: 720-292-2722 Toll Free: 833-224-2227
  Details about the vendors and fingerprinting in Colorado can be found on CBI's website here:
  https://cbi.colorado.gov/sections/biometric-identification-and-records-unit/employment-and-background-checks
- N/A ☑ C. Purchase agreement, stock transfer agreement, and/or authorization to transfer license
- ☐ D. List of all notes and loans (Copies to also be attached)

V. Sole proprietor/husband and wife partnership (if applicable)

- N/A ☑ A. Form DR 4679
- ☐ B. Copy of State issued Driver's License or Colorado Identification Card for each applicant

VI. Corporate applicant information (if applicable)

- ☐ A. Certificate of Incorporation
- N/A ☑ B. Certificate of Good Standing
- ☐ C. Certificate of Authorization if foreign corporation (out of state applicants only)

VII. Partnership applicant information (if applicable)

- N/A ☑ A. Partnership Agreement (general or limited).
- ☐ B. Certificate of Good Standing

VIII. Limited Liability Company applicant information (if applicable)

- ☑ A. Copy of articles of organization
- ☑ B. Certificate of Good Standing
- ☑ C. Copy of Operating Agreement (if applicable)
- N/A ☑ D. Certificate of Authority if foreign LLC (out of state applicants only)

IX. Manager registration for Hotel and Restaurant, Tavern, Lodging & Entertainment, and Campus Liquor Complex licenses when included with this application

- ☑ A. $75.00 fee
- N/A ☑ B. Individual History Record (DR 8404-I)
- ☑ C. If owner is managing, no fee required

Name	Type of License	Account Number

	Yes	No
7. Is the applicant (including any of the partners if a partnership; members or managers if a limited liability company; or officers, stockholders or directors if a corporation) or managers under the age of twenty-one years?	☐	☒
8. Has the applicant (including any of the partners if a partnership; members or managers if a limited liability company; or officers, stockholders or directors if a corporation) or managers ever (in Colorado or any other state):		
(a) Been denied an alcohol beverage license?	☐	☒
(b) Had an alcohol beverage license suspended or revoked?	☐	☒
(c) Had interest in another entity that had an alcohol beverage license suspended or revoked?	☐	☒
If you answered yes to 8a, b or c, explain in detail on a separate sheet.		
9. Has a liquor license application (same license class), that was located within 500 feet of the proposed premises, been denied within the preceding two years? If "yes", explain in detail. _____	☐	☒
10. Are the premises to be licensed within 500 feet, of any public or private school that meets compulsory education requirements of Colorado law, or the principal campus of any college, university or seminary?	☐	☒
or		
Waiver by local ordinance?	☐	☐
Other: _____		
11. Is your Liquor Licensed Drugstore (LLDS) or Retail Liquor Store (RLS) within 1500 feet of another retail liquor license for off-premises sales in a jurisdiction with a population of greater than (>) 10,0000? **NOTE**: The distance shall be determined by a radius measurement that begins at the principal doorway of the LLDS/RLS premises for which the application is being made and ends at the principal doorway of the Licensed LLDS/RLS.	☐	☒
12. Is your Liquor Licensed Drugstore (LLDS) or Retail Liquor Store (RLS) within 3000 feet of another retail liquor license for off-premises sales in a jurisdiction with a population of less than (<) 10,0000? **NOTE**: The distance shall be determined by a radius measurement that begins at the principal doorway of the LLDS/RLS premises for which the application is being made and ends at the principal doorway of the Licensed LLDS/RLS.	☐	☒
13a. For additional Retail Liquor Store only. Was your Retail Liquor Store License issued on or before January 1, 2016?	☐	☒
13b. Are you a Colorado resident?	☒	☐
14. Has a liquor or beer license ever been issued to the applicant (including any of the partners, if a partnership; members or manager if a Limited Liability Company; or officers, stockholders or directors if a corporation)? If yes, identify the name of the business and list any current financial interest in said business including any loans to or from a licensee.	☐	☒
15. Does the applicant, as listed on line 2 of this application, **have legal possession of the premises by ownership**, lease or other arrangement?	☒	☐
☐ Ownership ☒ Lease ☐ Other (Explain in Detail) _____		
a. If leased, list name of landlord and tenant, and date of expiration, **exactly** as they appear on the lease:		
b. Is a percentage of alcohol sales included as compensation to the landlord? If yes, complete question 16.	☐	☒
c. Attach a diagram designates the area to be licensed in black bold outline (including dimensions) which shows the bars, brewery, walls, partitions, entrances, exits and what each room shall be utilized for in this business. This diagram should be no larger than 8 1/2" X 11".		

Landlord	Tenant	Expires
Iva Lou Bailey	Chuds, LLC	4-30-25

16. Who, besides the owners listed in this application (including persons, firms, partnerships, corporations, limited liability companies) will loan or give money, inventory, furniture or equipment to or for use in this business; or who will receive money from this business? Attach a separate sheet if necessary.

Last Name	First Name	Date of Birth	FEIN or SSN	Interest/Percentage
N/A				
N/A				

Attach copies of all notes and security instruments and any written agreement or details of any oral agreement, by which any person (including partnerships, corporations, limited liability companies, etc.) will share in the profit or gross proceeds of this establishment, and any agreement relating to the business which is contingent or conditional in any way by volume, profit, sales, giving of advice or consultation.

17. Optional Premises or Hotel and Restaurant Licenses with Optional Premises: Has a local ordinance or resolution authorizing optional premises been adopted?	☐	☒
Number of additional Optional Premise areas requested. (See license fee chart)		
18. Liquor Licensed Drugstore (LLDS) applicants, answer the following: (a) Is there a pharmacy, licensed by the Colorado Board of Pharmacy, located within the applicant's LLDS premise? **If "yes" a copy of license must be attached.**	☐	☒
19. Club Liquor License applicants answer the following: **Attach a copy of applicable documentation**		
(a) Is the applicant organization operated solely for a national, social, fraternal, patriotic, political or athletic purpose and not for pecuniary gain?	☐	☒
(b) Is the applicant organization a regularly chartered branch, lodge or chapter of a national organization which is operated solely for the object of a patriotic or fraternal organization or society, but not for pecuniary gain?	☐	☒
(c) How long has the club been incorporated?		
(d) Has applicant occupied an establishment for three years (three years required) that was operated solely for the reasons stated above?	☐	☒
20. Brew-Pub, Distillery Pub or Vintner's Restaurant applicants answer the following: (a) Has the applicant received or applied for a Federal Permit? (Copy of permit or application must be attached)	☐	☒

Name	Type of License	Account Number

21. Campus Liquor Complex applicants answer the following:

	Yes	No
(a) Is the applicant an institution of higher education?	☐	☒
(b) Is the applicant a person who contracts with the institution of higher education to provide food services? **If "yes" please provide a copy of the contract with the institution of higher education to provide food services.**	☐	☒

22. For all on-premises applicants.
a. Hotel and Restaurant, Lodging and Entertainment, Tavern License and Campus Liquor Complex, the Registered Manager must also submit an Individual History Record
- DR 8404-I and fingerprints.

b. For all Liquor Licensed Drugstores (LLDS) the Permitted Manager must also submit an Manager Permit Application
- DR 8000 and fingerprints.

Last Name of Manager	First Name of Manager
AuLich	Edward

23. Does this manager act as the manager of, or have a financial interest in, any other liquor licensed establishment in the State of Colorado? If yes, provide name, type of license and account number. ☐ ☒

24. Related Facility - Campus Liquor Complex applicants answer the following:

	Yes	No
a. Is the related facility located within the boundaries of the Campus Liquor Complex?	☐	☒

If yes, please provide a map of the geographical location within the Campus Liquor Complex.
If no, this license type is not available for issues outside the geographical location of the Campus Liquor Complex.

b. Designated Manager for Related Facility- Campus Liquor Complex

Last Name of Manager	First Name of Manager

25. Tax Distraint Information. Does the applicant or any other person listed on this application including its partners, officers, directors, stockholders, members (LLC) or managing members (LLC) and any other persons with a 10% or greater financial interest in the applicant currently have an outstanding tax distraint issued to them by the Colorado Department of Revenue? ☐ ☒

If yes, provide an explanation and include copies of any payment agreements.

26. If applicant is a corporation, partnership, association or limited liability company, applicant must list all **Officers, Directors, General Partners, and Managing Members**. In addition, applicant must list any stockholders, partners, or members with **ownership of 10% or more in the applicant. All persons listed below** must also attach form DR 8404-I (Individual History Record), and submit fingerprint cards to the local licensing authority.

Name	Home Address, City & State	DOB	Position	%Owned
Edward AuLich	104 S 3rd ST Westcliffe, CO	9/1/51	Owner/mgr	34
Maria AuLich	104 S 3rd ST Westcliffe, CO	9/22/56	Owner/mgr	33
Nicholas AuLich	104 S 3rd St Westcliffe	9/25/72	Owner mgr	33

** If applicant is owned 100% by a parent company, please list the designated principal officer on above.
** Corporations - the President, Vice-President, Secretary and Treasurer must be accounted for above (Include ownership percentage if applicable)
** If total ownership percentage disclosed here does not total 100%, applicant must check this box:

☐ Applicant affirms that no individual other than these disclosed herein owns 10% or more of the applicant and does not have financial interest in a prohibited liquor license pursuant to Title 47 or 48, C.R.S.

Name	Type of License	Account Number

Oath Of Applicant

I declare under penalty of perjury in the second degree that this application and all attachments are true, correct, and complete to the best of my knowledge. I also acknowledge that it is my responsibility and the responsibility of my agents and employees to comply with the provisions of the Colorado Liquor or Beer Code which affect my license.

Authorized Signature	Printed Name and Title	Date
Ed Aulich	Edward Aulich	9/9/22

Report and Approval of Local Licensing Authority (City/County)

Date application filed with local authority	Date of local authority hearing (for new license applicants; cannot be less than 30 days from date of application)
9-15-22	

The Local Licensing Authority Hereby Affirms that each person required to file DR 8404-I (Individual History Record) or a DR 8000 (Manager Permit) has been.

- [x] Fingerprinted
- [x] Subject to background investigation, including NCIC/CCIC check for outstanding warrants

That the local authority has conducted, or intends to conduct, an inspection of the proposed premises to ensure that the applicant is in compliance with and aware of, liquor code provisions affecting their class of license

(Check One)

- [ ] Date of inspection or anticipated date _____
- [x] Will conduct inspection upon approval of state licensing authority

	Yes	No
N/A [ ] Is the Liquor Licensed Drugstore (LLDS) or Retail Liquor Store (RLS) within 1,500 feet of another retail liquor license for off-premises sales in a jurisdiction with a population of > 10,0000?	[ ]	[ ]
N/A [ ] Is the Liquor Licensed Drugstore(LLDS) or Retail Liquor Store (RLS) within 3,000 feet of another retail liquor license for off-premises sales in a jurisdiction with a population of < 10,0000?	[ ]	[ ]
NOTE: The distance shall be determined by a radius measurement that begins at the principal doorway of the LLDS/RLS premises for which the application is being made and ends at the principal doorway of the Licensed LLDS/RLS.		
N/A [ ] Does the Liquor-Licensed Drugstore (LLDS) have at least twenty percent (20%) of the applicant's gross annual income derived from the sale of food, during the prior twelve (12) month period?	[ ]	[ ]

The foregoing application has been examined; and the premises, business to be conducted, and character of the applicant are satisfactory. We do report that such license, if granted, will meet the reasonable requirements of the neighborhood and the desires of the adult inhabitants, and will comply with the provisions of Title 12, Article 46 or 47, C.R.S., and Liquor Rules. **Therefore, this application is approved.**

Local Licensing Authority for	Telephone Number	
Town of Westcliffe	719-783-2282	[x] Town, City [ ] County

Signature	Print	Title	Date
Signature	Print	Title	Date

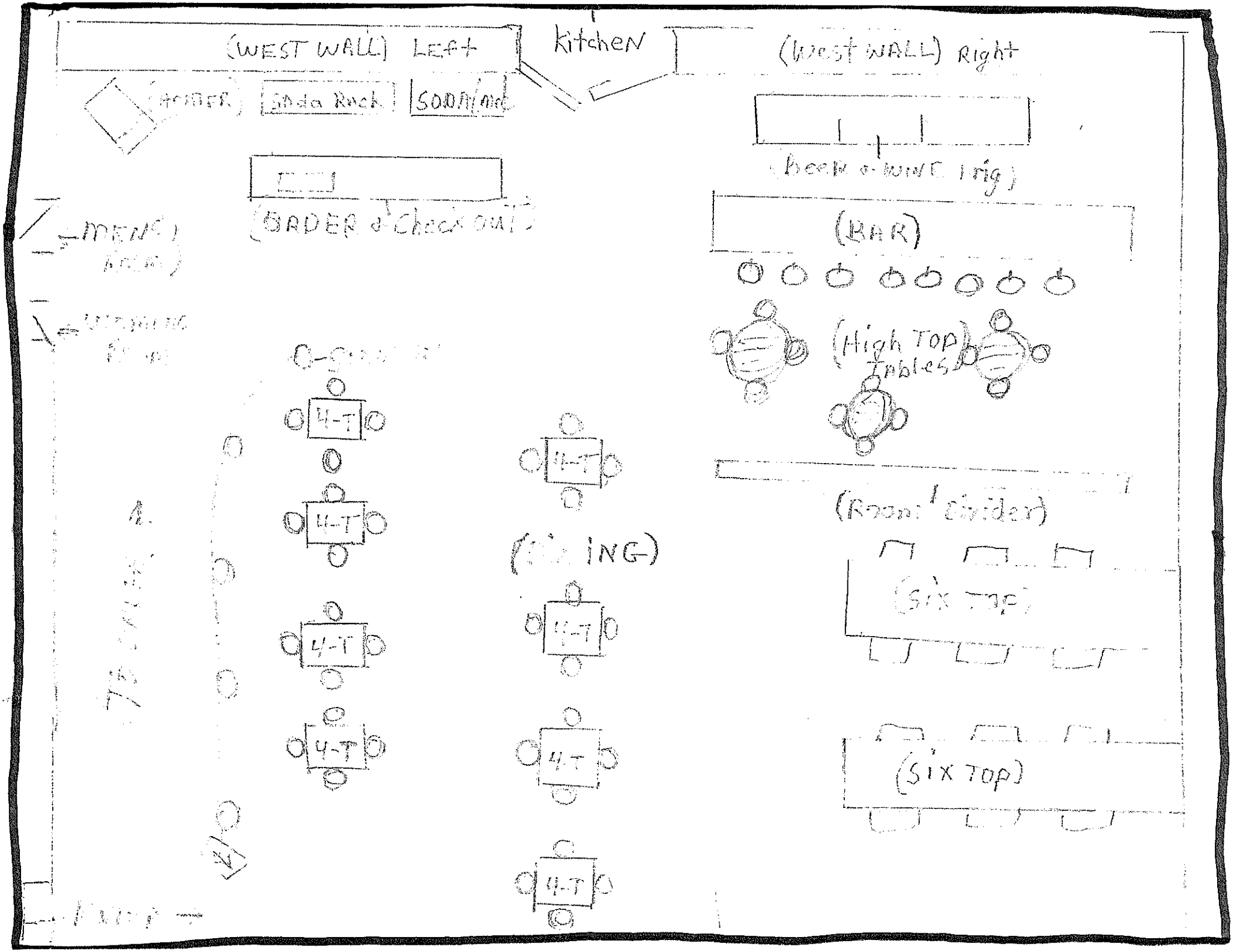
(WEST WALL) LEFT
Kitchen
(West WALL) Right
Soda Rack
SODA/Ice
(beer & WINE frig)
(ORDER & Check OUT)
(BAR)
(High TOP Tables)
(Room Divider)
4-T
(DINING)
(SIX TOP)
(SIX TOP)

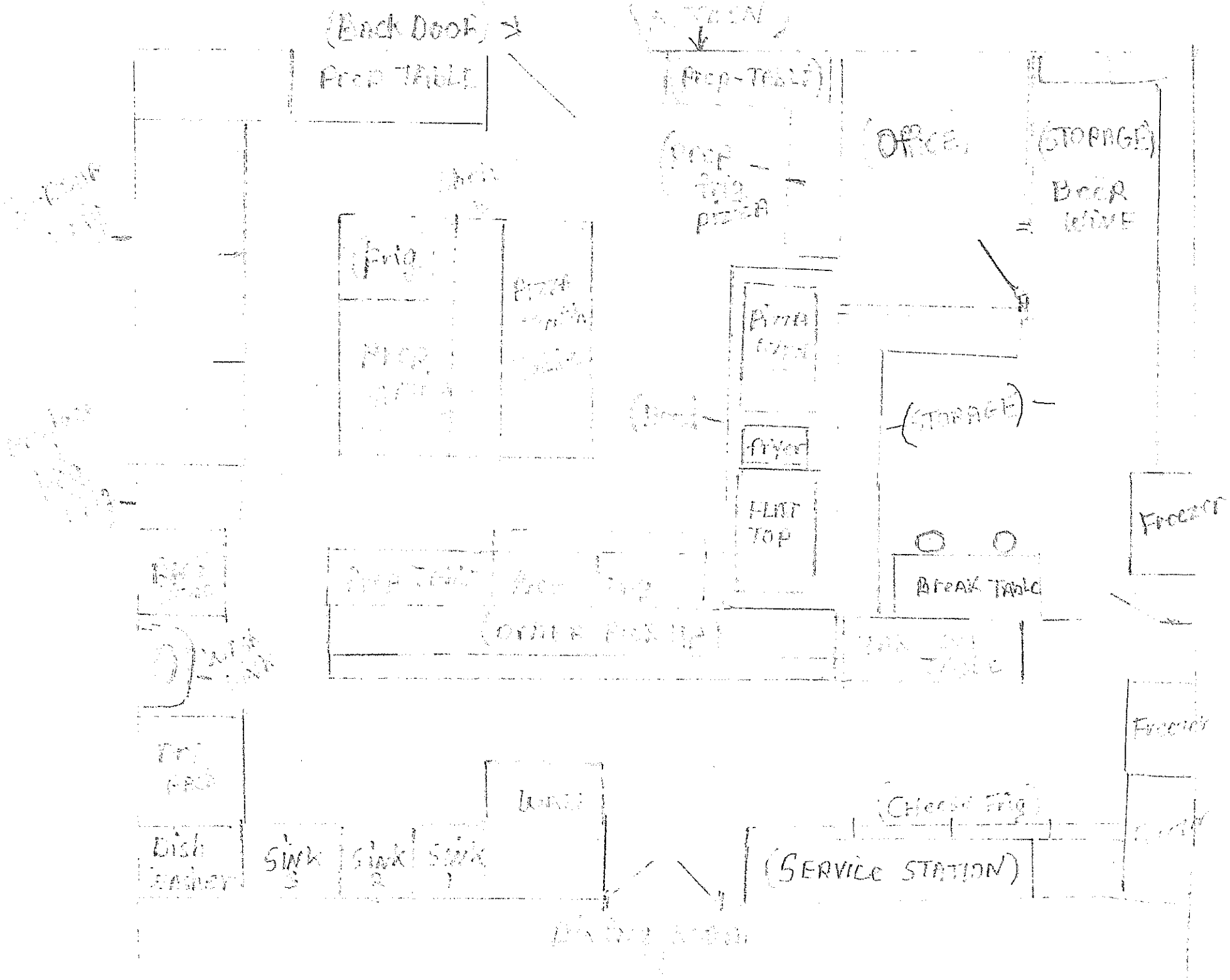
(Back Door)
Prep Table
(Prep-Table)
Office
(STORAGE)
Beer
Wine
Frig
Pizza
Pizza
Fryer
Flat
Top
(STORAGE)
Break Table
Freezer
Freezer
Sink
Sink
Sink
(Service Station)

Recd: 10/3

TOWN OF WESTCLIFFE
REQUEST TO BE PLACED ON AGENDA

Office of the Town Clerk
P.O. Box 406
Westcliffe, CO. 81252
townclerk@townofwestcliffe.com
719-783-2282

_____ **Westcliffe Town Board** __X__ **Westcliffe Planning Commission**

Here are things you need to know:

- You must contact the Town staff prior to coming to the Board. Quite often the issue can be resolved by staff action.
- Please plan on attending the meeting. The Board of Trustees will be unable to take action without a representative in attendance.

Please complete the following information and return this form no later than ten days prior to the Board meeting to the above address or bring it to the Town Hall at 1000 Main Street our office hours are Monday through Friday, 8:00 a.m. to 5:00 p.m. (Regular Board meetings are scheduled for the first Monday of each month.)

Name of person making presentation: Donald Wilcox

Organization, if speaking on behalf of a group: Westcliffe Townhomes

Is this a request for Board action? (Yes) No

Please provide a summary of your comments:

Request for encroachment on Public Right-of-way.

What staff member have you spoken to about this? Please summarize your discussion:

Dwight Johns

Contact information:

Name: Donald Wilcox
Mailing Address: 3131 County Rd 215
Westcliffe, CO 81252

email: dwilly5613@gmail.com
Daytime Phone: 719-371-1709

3/16 = 1'
24'
right of way
18'
townhomes
Granada Court
westcliffe
8' minimum
future sidewalk,
curb & gutter
4' x 4'
pad for mailbox
car 6' wide average
N

Pad 4' x 4' x 8" thick

with a grid of rebar

fastening bolts as per specs

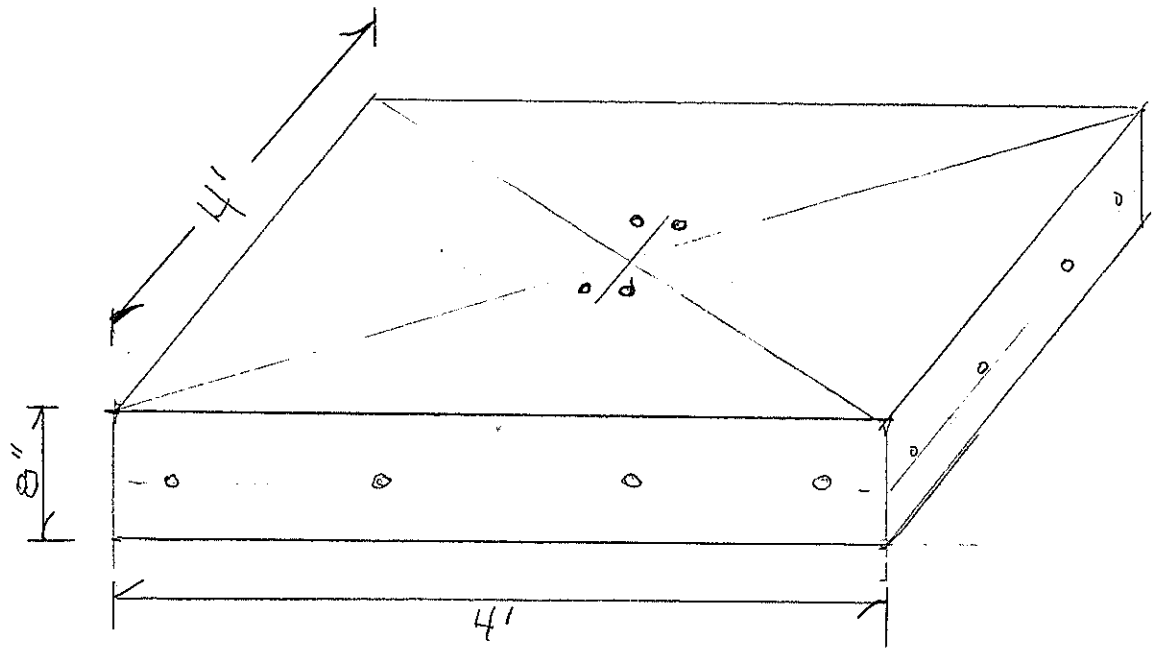

HOA MAILBOX LOCATION VARIANCE

Relevant issues
Prepared by Don Wilcox

OVERVIEW & PURPOSE

This is a simple request for variance to the 18 foot right of way in order to pour a slab of concrete for installation of a cluster mailbox at 9 Granada Court.

KEY POINTS

1. USPS has a limited supply of PO Boxes.
2. The waiting list for PO Boxes is long and the expense is unnecessary.
3. Installation request is on and for an currently established Postal route.
4. Request to add address to current postal route is not at issue. In fact it is supported by the USPS for the above listed reasons.
5. The only relevant issue is the variance to pour a 4'x4' slab in order to appropriately anchor and stabilize the box. This may require a variance to building within the 18 (eighteen) foot road right of way.

SPECIFIC DETAILS, Postal Service

1. Upon consultation with the Postmaster, several salient facts were clarified.
2. An application must be submitted to change the address to delivery service from PO Box service. Several significant factors apply and are directly in favor of this.
3. There is a severe shortage of available PO Boxes currently and it is only expected to worsen in the future.
4. Granada Court is already a currently established postal route.
5. A request to add one address albeit multiple residences is such a significant issue for the reasons listed above that it is more than likely it will be approved

expeditiously for the benefit of the Postal Service.

6. A cluster box is the recommended solution per the USPS as it is preferred due to efficiency and aesthetics. It has been proven and routinely utilized throughout the country.
7. A cluster box is highly preferred by USPS over installation of twenty additional single mailboxes for a single physical location.

SPECIFICS, Town of Westcliffe

1. The only issue is the variance to the concrete within the 18 (eighteen) foot right of way.
2. This should be a non issue as follows; While there may be no other cluster boxes currently within the town limits, there are in fact other individual boxes of the same construction and mounting type currently placed within a couple of blocks of Granada Court and Town Hall.
3. Example; at the Westcliffe Clinic there is a single box of the same type construction and mounting. It is anchored to a concrete pillar, poured and set above slope and grade of roadway. It does not interfere with plowing, maintenance of roadway nor any other routine town function. This is on a through street.
4. As Granada Court is a dead end roadway with houses on the end it is not foreseeable the it will ever be widened to the point that installation of our requested concrete will interfere in any way with town roadway maintenance of any kind
5. Our proposed installation location as established in consultation with both the USPS and Neil (Town Man, roadways, sent by town as POC at time of our initial equest) is setback approximately 8 (eight) feet from the south edge of the roadway to the leading edge of the concrete. This is on the south side of the street as that is where the mail carrier currently travels for delivery.
6. This location takes into consideration snow plowing of roadways, proper drainage, access to both the front and rear of the cluster box without trespass onto private property.
7. It would seem that this type of box and installation would be much preferred rather than a line of twenty mailboxes within two to three feet of the roadway edge. This cluster box is more efficient for the Postal Service as well as more aesthetic and less intrusive to the town and surrounding properties.

Box type, style, construction and installation, Specifics

1. The cluster box is all metal construction with accesses both front and rear for USPS and homeowners
2. The box itself is approximately 36 inches wide and 18 inches deep. It sits on a pedestal of appropriate height and design to comply with USPS requirements.
3. The box weighs less than 200 pounds (They are regularly installed by a single technician. In the past my wife has done installation of cluster boxes much larger than this by herself without the aid of equipment).
4. Manufacturers recommendation for installation which takes into account relevant building codes nationwide, weight supported, strength of concrete etc. is simple slab construction of approximately 4'x4' or 3' deep X 5' wide which then allows for standing on concrete while accessing the box. Square footage remains relatively the same. Simple (ready mix) concrete four inches deep set on level, undistrubed, or compacted dirt provides adequate structure as it is truly a stabilizing base rather than a structure supporting weight of any significance.
5. Please note: while there are installation instructions attached to the Postal Service packet on this subject, further inquiry proves they are not relevant in many cases and this case in particular. Of note, they are adopted by the USPS as GENERAL RECOMMENDATIONS based on location, variety of soils, size and weight of box being installed, building codes as may vary highly nationwide and most significantly it is the GUIDELINE FROM ONE MANUFACTURER as can be seen at the bottom of those pages. (This can be verified by the Postmaster although he is unavailable for today's meeting as he is currently verifying mail routes.)

SUMMARY

In short, the Westcliffe Townhome Association Board approached this project in good faith and sought all approvals as needed prior to embarking on this project

We sought out an approved vendor and found a simple and aesthetic box.

We sought approval from the USPS. Although without a Postmaster at the time of inquiry we were still within the guidelines and simple had to submit a request for additional to an already established postal route. We were then directed to the Town of Westcliffe for any other guidance/approval.

The town of Westcliffe sent their representative, Neil, to coordinate, direct and approve. With him we established how best to complete this task, meeting the needs of the residents and Post Office while also complying with and looking out for the best interests of the Town of Westcliffe and the community as a whole.

With all of these facts at hand, we respectfully ask that the town allow us to follow the already established precedent and allow us to appropriately erect the most common sense solution to mail delivery at our location.

Respectfully, thank you for your time and attention to this matter.

KIRKPATRICK BANK

COLORADO

09/22/2022

Certificate of Deposit Terms	Minimum Balance to Open & Obtain Annual Percentage Yield	Interest Rate	Quarterly Compounding Annual Percentage Yield	Semi-Annual Compounding Annual Percentage Yield	Annual Compounding Annual Percentage Yield
7-29 Day CD	1,000.00	0.30%	0.30%	0.30%	0.30%
30-89 Day CD	1,000.00	0.40%	0.40%	0.40%	0.40%
90-179 Day CD	1,000.00	0.50%	0.50%	0.50%	0.50%
180-364 Day CD	1,000.00	0.80%	0.80%	0.80%	0.80%
12-17 Month CD	1,000.00	1.20%	1.21%	1.20%	1.20%
18-23 Month CD	1,000.00	1.30%	1.31%	1.30%	1.30%
24 Month CD	1,000.00	1.40%	1.41%	1.40%	1.40%
36 Month CD	1,000.00	1.20%	1.21%	1.20%	1.20%
48 Month CD	1,000.00	1.10%	1.10%	1.10%	1.10%
60 Month CD	1,000.00	1.00%	1.00%	1.00%	1.00%

Incividual Retirement Account Terms	Minimum Balance to Open & Obtain Annual Percentage Yield	Interest Rate	Daily Compounding Annual Percentage Yield
18 Month Variable	500.00	1.30%	1.31%
18 Month Fixed	500.00	1.30%	1.31%
24 Month Fixed	500.00	1.40%	1.41%
36 Month Fixed	500.00	1.20%	1.21%
18 Month Variable Roth	500.00	1.30%	1.31%
18 Month Fixed Roth	500.00	1.30%	1.31%
24 Month Fixed Roth	500.00	1.40%	1.41%
36 Month Fixed Roth	500.00	1.20%	1.21%
18 Month Variable Educat on	500.00	1.30%	1.31%

FDIC

APY's are current as of September 22, 2022. Interest will be paid at the rate shown for the entire balance in the account.
The rates may change after the account is opened. Fees could reduce the earnings on the account.
Early withdrawal penalties may apply.